PS25k2 CS-G200-15/4

Solar Surface Pump System

System Overview

Head	max. 16 m
Flow rate	max. 457 m³/h

Technical Data

Controller PS25k2

- Control inputs for dry running protection, remote control etc.
- Protected against reverse polarity, overload and overtemperature
- Integrated MPPT (Maximum Power Point Tracking)

Power	max. 23 kW
Input voltage	max. 850 V
Optimum Vmp*	> 575 V
Motor current	max. 33 A
Efficiency	max. 98 %
Ambient temp.	-30...50 °C
Enclosure class	IP54

Motor AC DRIVE CS-G 18.5kW/4p

- Highly efficient 3-phase AC motor
- Frequency: 25...50 Hz

Motor speed	740...1.480 rpm
Power factor	0,87
Insulation class	F
Enclosure class	IPX4

Pump End PE CS-G200-15/4

- Premium materials

Pump Unit PU CS-G200-15/4 (Motor, Pump End)

Water temperature	max. 90 °C
Suction head	max. 3 m

Standards

2006/42/EC, 2004/108/EC, 2006/95/EC

Meets the requirements of:
IEC/EN 61702:1995,
IEC/EN 62253 Ed.1

The logos shown reflect the approvals that have been granted for this product family. Products are ordered and supplied with the approvals specific to the market requirements.

*Vmp: MPP-voltage under Standard Test Conditions (STC): 1000 W/m² solar irradiance, 25 °C cell temperature

BERNT LORENTZ GmbH & Co. KG
Kroegerskoppel 7, 24558 Henstedt-Ulzburg, Germany,
Tel +49 (0)4193 7548-0, Fax -29, www.lorentz.de

Sun. Water. Life.

Created by LORENTZ COMPASS 3.0.10.67
All specifications and information are given with good intent, errors are possible and products may be subject to change without notice.Pictures may differ from actual products depending on local market requirements and regulations.

PS25k2 CS-G200-15/4

Solar Surface Pump System

Pump Chart

Vmp* > 575 V

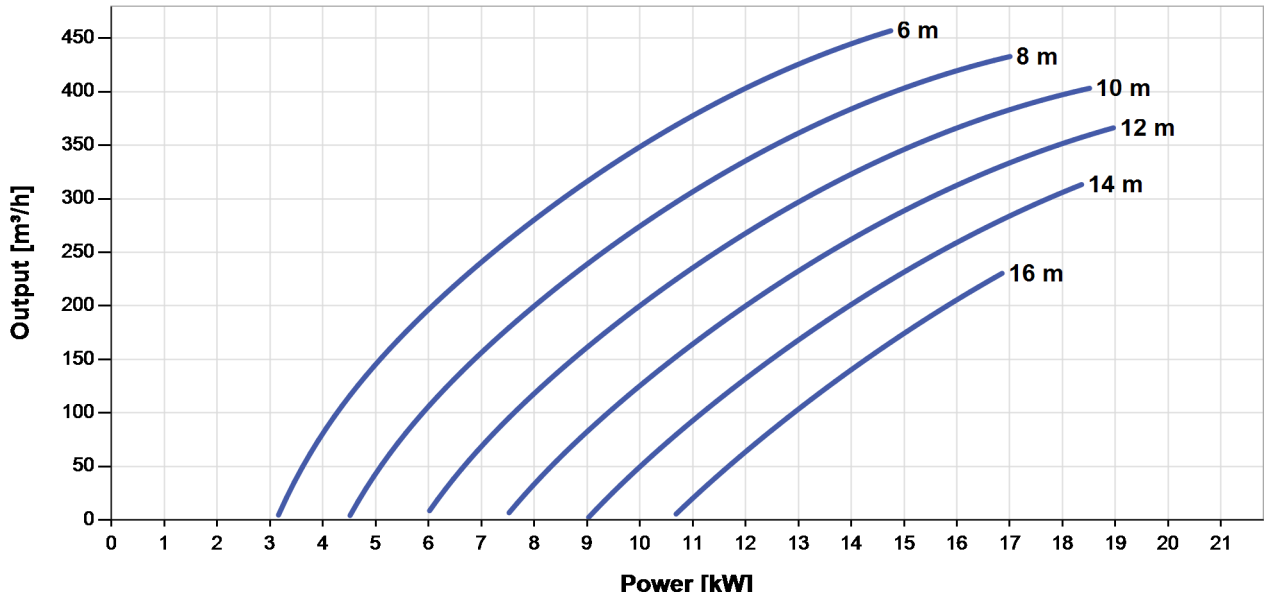

NPSH

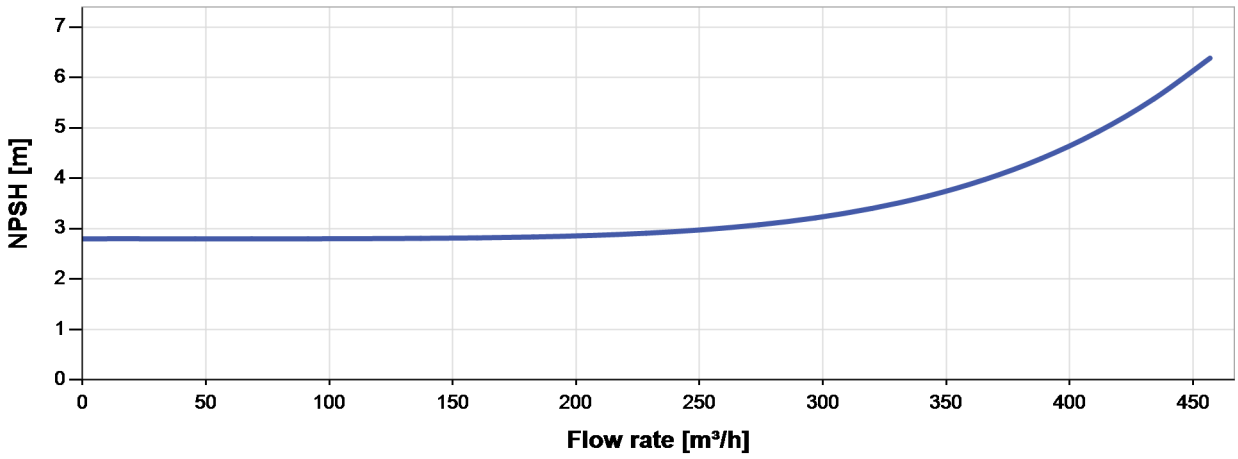

The NPSH (Net Positive Suction Head) is NOT the operating suction head. To calculate the operating suction head please refer to the installation manual.

*Vmp: MPP-voltage under Standard Test Conditions (STC): 1000 W/m² solar irradiance, 25 °C cell temperature

BERNT LORENTZ GmbH & Co. KG
Kroegerskoppel 7, 24558 Henstedt-Ulzburg, Germany,
Tel +49 (0)4193 7548-0, Fax -29, www.lorentz.de

Sun. Water. Life.

Created by LORENTZ COMPASS 3.0.10.67
All specifications and information are given with good intent, errors are possible and products may be subject to change without notice.Pictures may differ from actual products depending on local market requirements and regulations.

PS25k2 CS-G200-15/4

Solar Surface Pump System

Dimensions and Weights

Controller

H = 500 mm
H1 = 450 mm
H2 = 425 mm
W1 = 320 mm
W2 = 290 mm
D = 9,0 mm
D1 = 220 mm
D2 = 250 mm

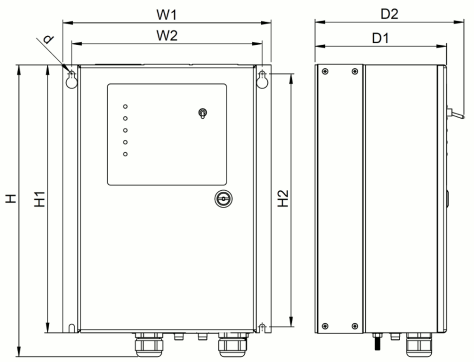

Pump Unit

A = 360 mm
B = 280 mm
C = 580 mm
D = 1.000 mm
E = 270 mm
F = 415 mm
G = 278 mm
H = 219 mm
I = 200 mm
J = 266 mm
K = 295 mm
L = 340 mm
M = 22 mm
N = 350 mm
O = 360 mm
P = 24 mm

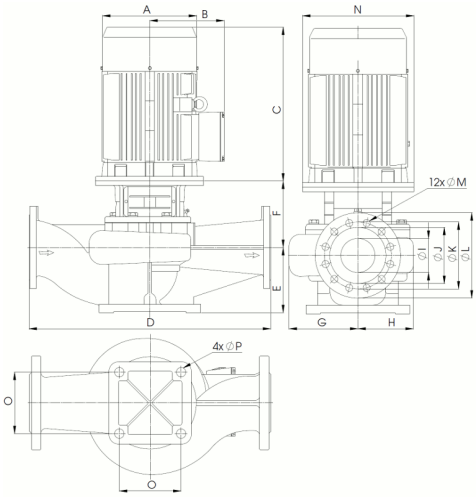

	Net weight
Controller	17 kg
Pump Unit	418 kg
Motor	134 kg
Pump End	284 kg

BERNT LORENTZ GmbH & Co. KG
Kroegerskoppel 7, 24558 Henstedt-Ulzburg, Germany,
Tel +49 (0)4193 7548-0, Fax -29, www.lorentz.de

Sun. Water. Life.

Created by LORENTZ COMPASS 3.0.10.67
All specifications and information are given with good intent, errors are possible and products may be subject to change without notice.Pictures may differ from actual products depending on local market requirements and regulations.